nRF52 PDK

User Guide

v1.2.1

NORDIC® SEMICONDUCTOR

Contents

Revision history . . . iii

1 Introduction . . . 4

2 Setting up the development kit . . . 6

3 Software tools . . . 7

4 Start developing . . . 8

5 Interface MCU . . . 9

5.1 IF Boot/Reset button . . . 9
5.2 Virtual COM port . . . 9
5.3 Interface MCU firmware (FW) . . . 10
5.4 MSD . . . 10

6 Hardware description . . . 12

6.1 Hardware drawings . . . 12
6.2 Block diagram . . . 13
6.3 Power supply . . . 13
6.4 Connector interface . . . 15
6.5 Buttons and LEDs . . . 17
6.5.1 I/O expander for buttons and LEDs . . . 18
6.6 32.768 kHz crystal . . . 20
6.7 Measuring current . . . 21
6.8 RF measurements . . . 22
6.9 Debug input . . . 23
6.10 Debug output . . . 24
6.11 NFC antenna interface . . . 25

Legal notices . . . 27

Revision history

Date	Version	Description
April 2020	1.2.1	Editorial changes
February 2017	1.2	• Created PDF • Added MSD on page 10 • Updated Interface MCU firmware (FW) on page 10

1 Introduction

In addition to hardware, the nRF52 PDK consists of firmware source code, documentation, hardware schematics, and layout files.

The key features of the development kit are:

- nRF52832 flash-based ANT/ANT+, *Bluetooth*® Low Energy SoC solution
- Buttons and LEDs for user interaction
- I/O interface for Arduino form factor plug-in modules
- SEGGER J-Link OB Debugger with debug out functionality
- Virtual COM Port interface via UART
- Drag-and-drop Mass Storage Device (MSD) programming
- Supporting NFC-A listen mode

For access to firmware source code, hardware schematics, and layout files, see www.nordicsemi.com.

Figure 1: 1 × nRF52 PDK (PCA10036) and 1 × NFC adhesive tag

Environmental Protection

Waste electrical products should not be disposed of with household waste.

Please recycle where facilities exist. Check with your local authority or retailer for recycling advice.

2 Setting up the development kit

Before you start developing, prepare your development kit hardware by completing a few easy steps and download the required software.

1. To set up the hardware, follow the instructions in Getting started with the nRF52 DK.
2. Download and install the software tools.
   a) **nRFgo Studio**. Download and install nRFgo Studio (which includes the nRF Tools package; JLinkARM, JLink CDC, nRFjprog, and mergehex) from nRFgo Studio.
   b) **Keil MDK-ARM**. Download and install the latest Keil MDK-ARM from Keil MDK-ARM Development Kit.
   c) **nRF5 SDK**. Download and extract the latest nRF5 SDK found on developer.nordicsemi.com.
   d) **Keil Device Family Pack**. Install the Device Family Pack that is shipped with the SDK, or let Keil install it automatically.
   e) **SDK documentation**. Read the information in the SDK Release Notes, and check the nRF5 SDK v16.0.0 documentation.

3 Software tools

We have an extensive range of supporting software tools to help you with testing and programming on your chip.

- **nRFgo Studio:** This is our tool for programming and configuring devices. It supports the programming of nRF52 SoftDevices, applications, and bootloaders.
- **nRF5 SDK:** The nRF5 Software Development Kit (SDK) provides source code of examples and libraries forming the base of your application development.
- **nRF5x tools:** nRF5x Tools is a package that contains JLinkARM, JLink CDC, nRFjprog, and mergehex. The nRFjprog is a command line tool for programming nRF5x series chips. It is also useful in a production setup. nRF5x Tools will be installed together with nRFgo Studio.
- **Master Control Panel:** The Master Control Panel is a software tool that is used to act as a Bluetooth Low Energy peer device.
  - **Master Control Panel**: The Master Control Panel is a software tool that is used with the nRF51 Dongle (PCA10031) to act as a Bluetooth Low Energy peer device. You can test your application's wireless connection with this tool. The Master Control Panel supports programming of SEGGER J-Link based nRF52 devices. For more information, see the help files in the Master Control Panel.
  - **nRF Master Control Panel for Android 4.3 or later:** nRF Master Control Panel for Android 4.3 or later is a powerful generic tool that allows you to scan and explore your Bluetooth Smart devices and communicate with them on an Android phone. MCP supports a number of Bluetooth SIG adopted profiles together with the Device Firmware Update (DFU) profile from Nordic Semiconductor.

    Note: This tool has been replaced by nRF Connect for Mobile.
- **S132 SoftDevice:** Bluetooth Smart concurrent multi-link protocol stack solution supporting simultaneous Central, Peripheral, Broadcaster, and Observer roles. For more information, see the S132 SoftDevice Specification and the nRF5 SDK v16.0.0 documentation.

We also recommend some third party software tools that are useful when developing with our products:

- **Keil MDK-ARM Development Kit:** Keil MDK-ARM Development Kit is a development environment specifically designed for microcontroller applications that lets you develop using the nRF52 SDK application and example files.
- **SEGGER J-Link Software:** The J-Link software is required to debug using the J-Link hardware that is packaged with our development kits.
- **ANTware II:** ANTWare is an application used for the control of ANT wireless devices. It is an excellent tool for first time ANT developers to explore the capabilities of ANT as a low power wireless solution, and for experienced users to easily setup and monitor advanced ANT networks. ANTWare II improves upon past versions with a slick new interface, streamlined functions, and a variety of new features.

4 Start developing

After you have set up the development kit and installed the toolchain, it is time to start developing.

There are several ways to continue from here:

- Running precompiled examples

  See the step-by-step instructions on how you can quickly test a precompiled example without having to use the full toolchain, it is a matter of copying and pasting a precompiled hex file onto your DK.
- Compiling and running a first example

  Test that you have set up your toolchain correctly by compiling, programming and running a very simple example.
- Running examples that use a SoftDevice

  Before you can run more advanced examples that use Bluetooth or ANT™, you must first program the SoftDevice on the DK.

5 Interface MCU

The Interface MCU is used to control the firmware on the nRF52832 IC by the on-board SEGGER J-Link.

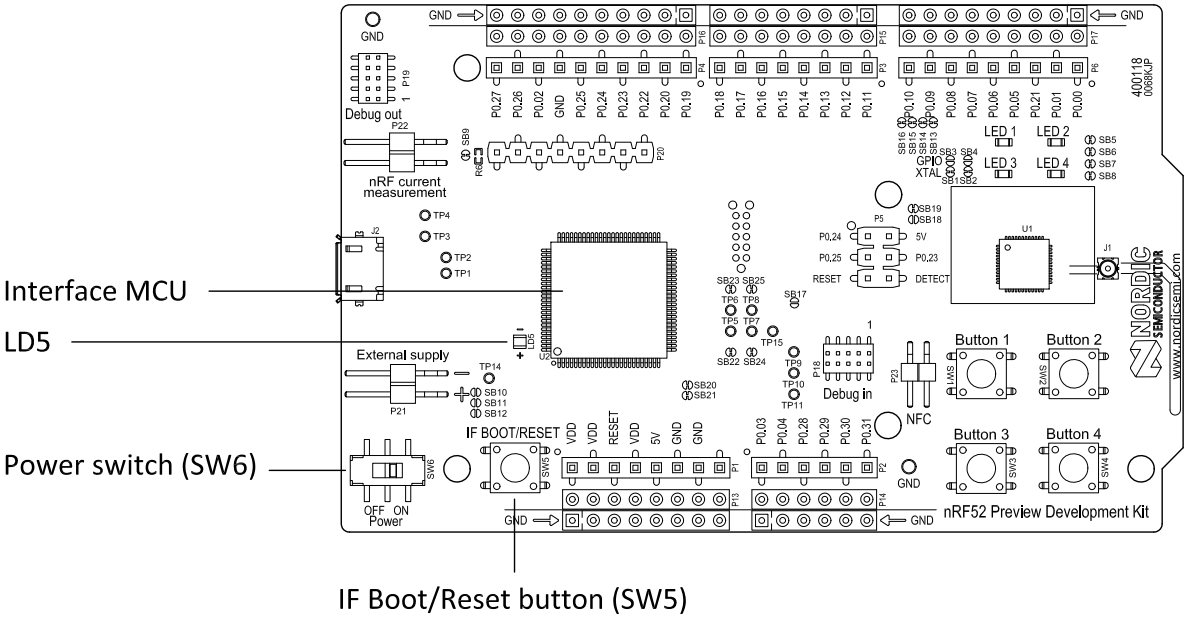

Figure 2: Interface MCU

5.1 IF Boot/Reset button

The nRF52 PDK is equipped with a boot/reset button (**SW5**).

This button is connected to the Interface MCU on the DK and has two functions:

- Resetting the nRF52832 device.
- Entering bootloader mode of the interface MCU.

During normal operation the button will function as a reset button for the nRF52832 device. For this to work, pin reset on P0.21 needs to be enabled for the nRF52832 device. The button is also used to enter the bootloader mode of the Interface MCU. To enter bootloader mode, keep the reset button pressed while powering up the DK until LED (**LD5**) starts to blink. You can power up the DK either by disconnecting and reconnecting the USB cable, or toggle the power switch (**SW6**).

Important: Pin reset can be enabled by defining the CONFIG_GPIO_AS_PINRESET variable in the project settings. This can be done by defining the preprocessor symbol in Keil, go to: **Project > Options for Target > C/C++ > Preprocessor Symbols > Define**. Here you can add the CONFIG_GPIO_AS_PINRESET variable after NRF52.

This functionality can be removed by doing a nRFjprog --recover.

5.2 Virtual COM port

The on-board Interface MCU features a Virtual COM port via UART.

The virtual COM port has the following features:

- Flexible baudrate setting up to 1 Mbps.
- Dynamic Hardware Flow Control (HWFC) handling.
- Tri-stated UART lines when no terminal is connected.

Table 1: Relationship of UART connections on nRF52832 and Interface MCU on page 10 shows an overview of the UART connections on nRF52832 and the interface MCU.

Default GPIO nRF52832	UART nRF52832	Interface MCU UART
P0.05	RTS	CTS
P0.06	TXD	RXD
P0.07	CTS	RTS
P0.08	RXD	TXD

Table 1: Relationship of UART connections on nRF52832 and Interface MCU

The UART signals are routed directly to the Interface MCU. The UART pins connected to the Interface MCU are tri-stated when no terminal is connected to the Virtual COM port on the computer.

Important: The terminal used must send a DTR signal in order to configure the UART Interface MCU pins.

The P0.05 (RTS) and P0.07 (CTS) can be used freely when HWFC is disabled on the nRF52832.

5.3 Interface MCU firmware (FW)

The on-board interface MCU is factory programmed with an mbed-compliant bootloader. This makes it possible to update the SEGGER J-Link OB interface firmware.

For more information on entering the bootloader mode, see IF Boot/Reset button on page 9.

To update Interface MCU firmware, drag the Interface image (.bin) into the mounted bootloader drive on the connected computer and power cycle the DK. It is also possible to download the latest SEGGER J-Link software from SEGGER J-Link Software and open a debug session in order to automatically update to the latest J-Link OB firmware version.

The J-Link OB image can be downloaded from www.nordicsemi.com.

Important: When in bootloader mode, do not drag and drop any file except those downloaded from www.nordicsemi.com for use with the Interface MCU. If a wrong file is used, it can overwrite the bootloader and ruin the Interface MCU firmware without the possibility of recovery.

5.4 MSD

The interface MCU features a Mass Storage Device (MSD). This makes the development kit appear as an external drive on your computer.

This drive can be used for drag-and-drop programming. Files cannot be stored on this drive. By copying a HEX file to the drive, the interface MCU will program the file to the device.

Note:

- Windows might try to defragment the MSD part of the interface MCU. If this happens, the interface MCU will disconnect and be unresponsive. To return to normal operation, the development kit must be power cycled.
- Your antivirus software might try to scan the MSD part of the interface MCU. Some antivirus programs trigger a false positive alert in one of the files and quarantine the unit. If this happens, the interface MCU will become unresponsive.
- If the computer is set up to boot from USB, it can try to boot from the development kit if the development kit is connected during boot. This could be avoided by unplugging the development kit before a computer restart, or changing the boot sequence of the computer.

You can also disable the MSD of the kit by using the **`msddisable`** command in J-Link Commander. To enable, use the **`msdenable`** command. These commands take effect after a power cycle of the development kit and should stay this way until changed again.

6 Hardware description

The nRF52 PDK (PCA10036) can be used as a development platform for the nRF52832 device. It features an onboard programming and debugging solution.

In addition to radio communication, the nRF52832 device can communicate with a computer through a virtual COM port provided by the interface MCU.

6.1 Hardware drawings

nRF52 PDK hardware drawings show both sides of the PCA10036.

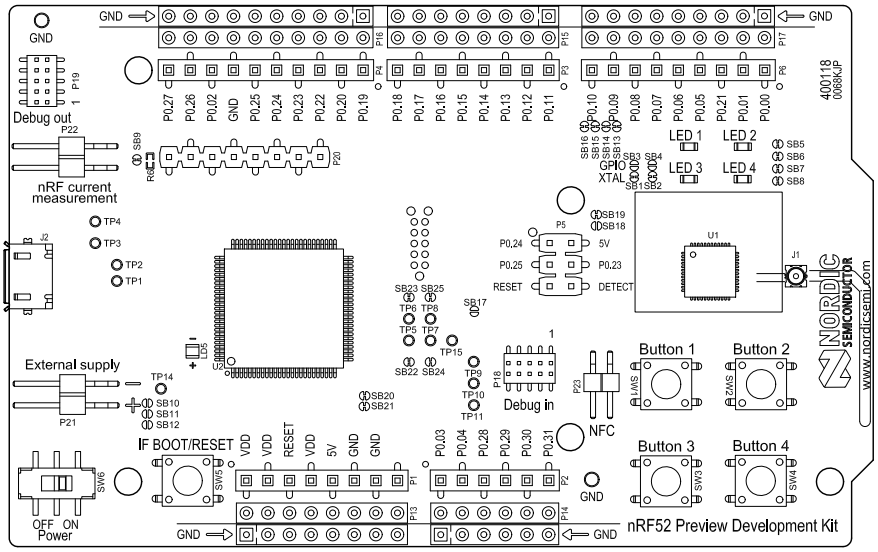

Figure 3: nRF52 PDK (PCA10036) top view

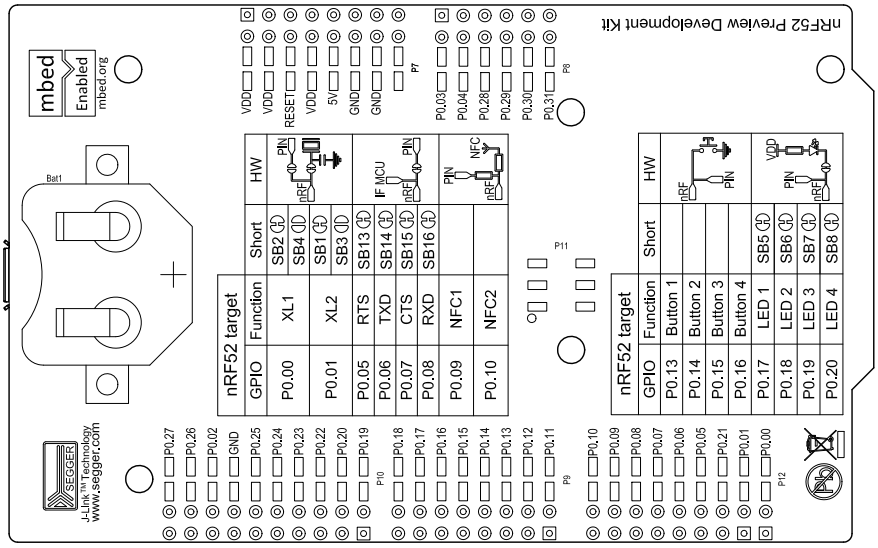

Figure 4: nRF52 PDK (PCA10036) bottom view

6.2 Block diagram

The nRF52 PDK block diagram shows the connections between the different blocks.

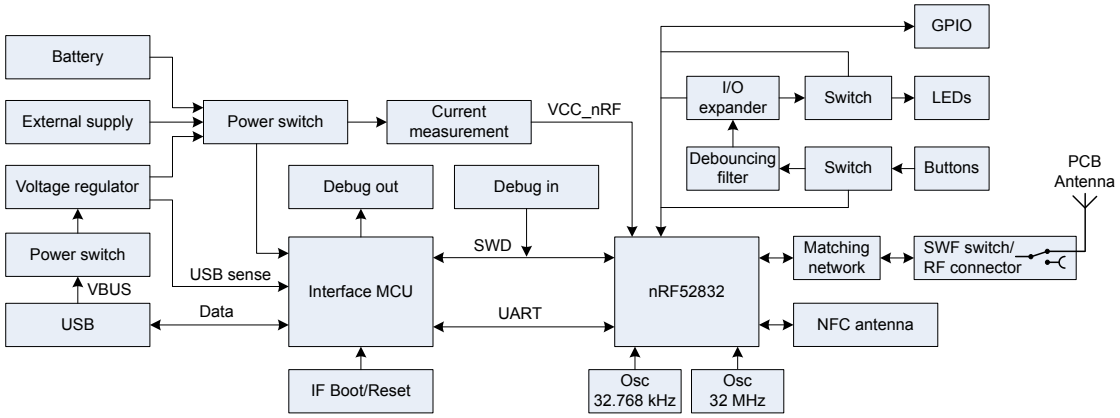

Figure 5: nRF52 PDK block diagram

6.3 Power supply

The nRF52 PDK has three power options: 5 V from the USB, external power supply, and coin cell battery.

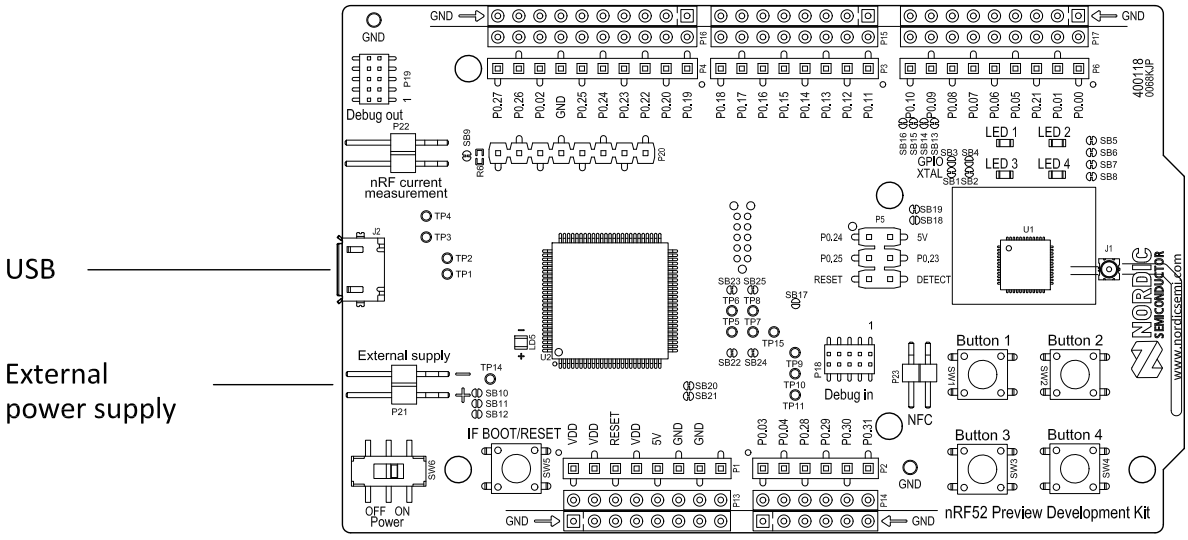

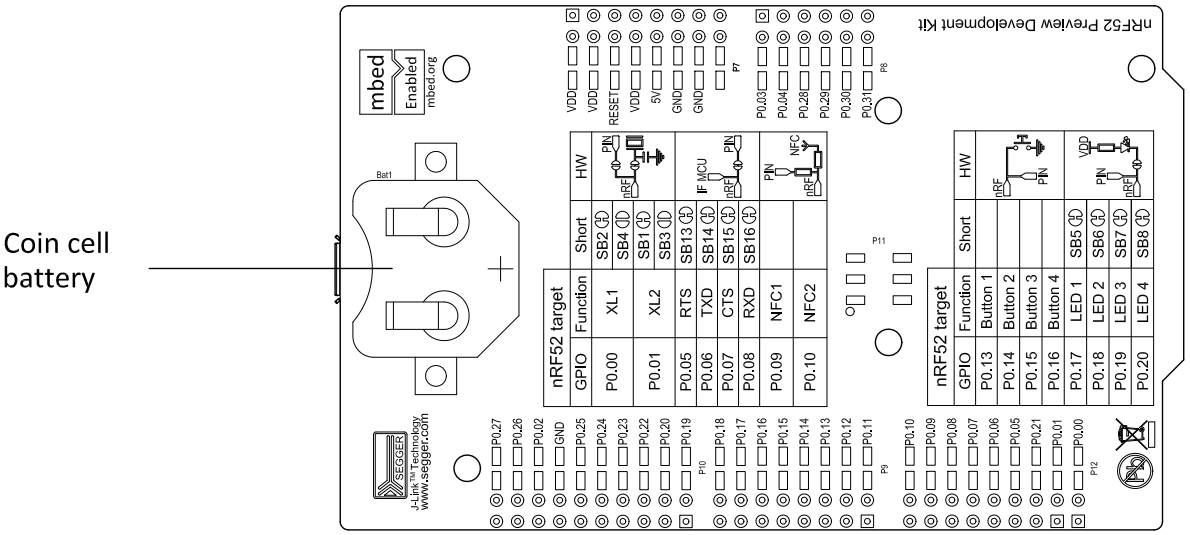

Figure 6: Power supply options

The 5 V from the USB is regulated down to 3.3 V through an on-board voltage regulator. The battery and external power supply are not regulated. The power sources are routed through a set of diodes (**D1A**, **D1B**, and **D1C**) for reverse voltage protection, where the circuit is supplied from the source with the highest voltage.

Important: When USB is not powered, the Interface MCU is in dormant state and will draw an additional current of ~ 20 µA in order to maintain the reset button functionality. This will affect current consumption, but not the nRF52832 current measurements, as described in Measuring current on page 21.

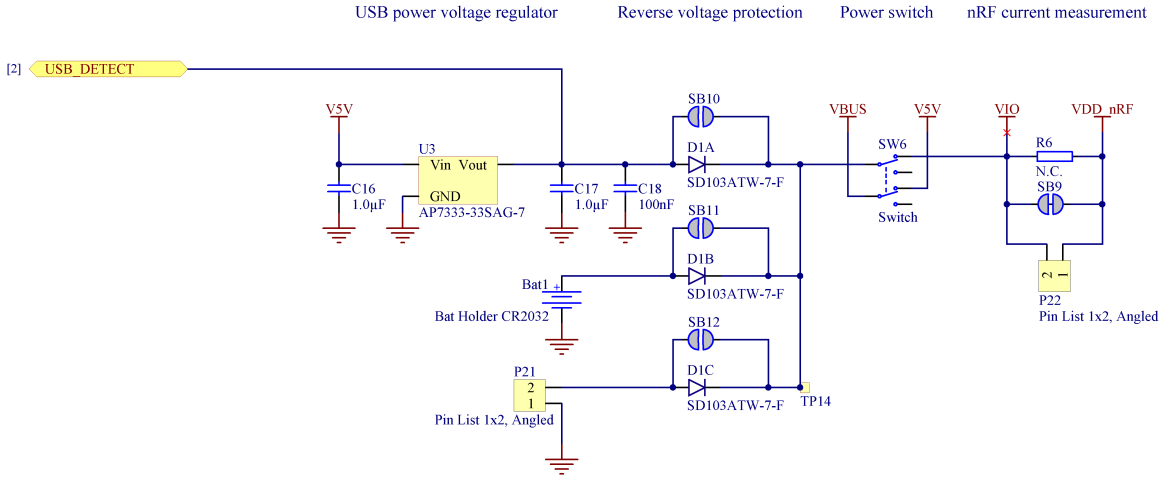

Figure 7: Power supply circuitry

The reverse voltage protection diodes will add a voltage drop to the supply voltage of the circuit. To avoid this voltage drop, the diodes can be bypassed by shorting one or more solder bridges.

Power source	Protection bypass	Voltage level
USB	SB10	3.3 V
Coin-cell battery	SB11	Battery
External supply	SB12	1.7 V - 3.6 V

Table 2: Protection diode bypass solder bridges

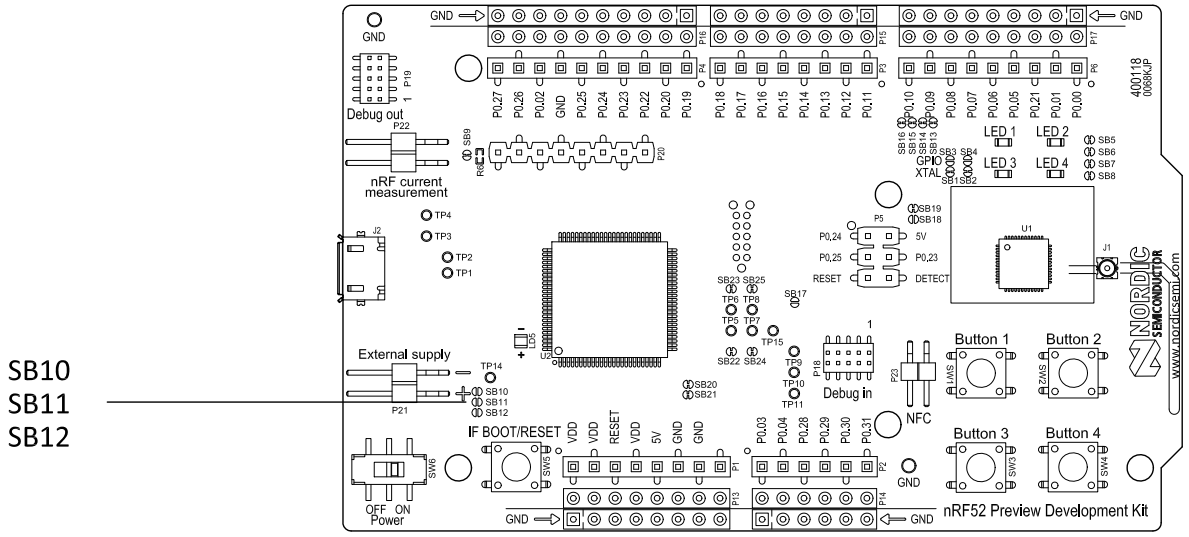

Figure 8: Protection diode bypass solder bridges

Important: Connect only one power source at the time. Shorting the solder bridges removes the reverse voltage protection.

6.4 Connector interface

Access to the nRF52832 GPIOs is available from connectors **P2**, **P3**, **P4**, **P5**, and **P6**. The **P1** connector provides access to ground and power on the nRF52 PDK.

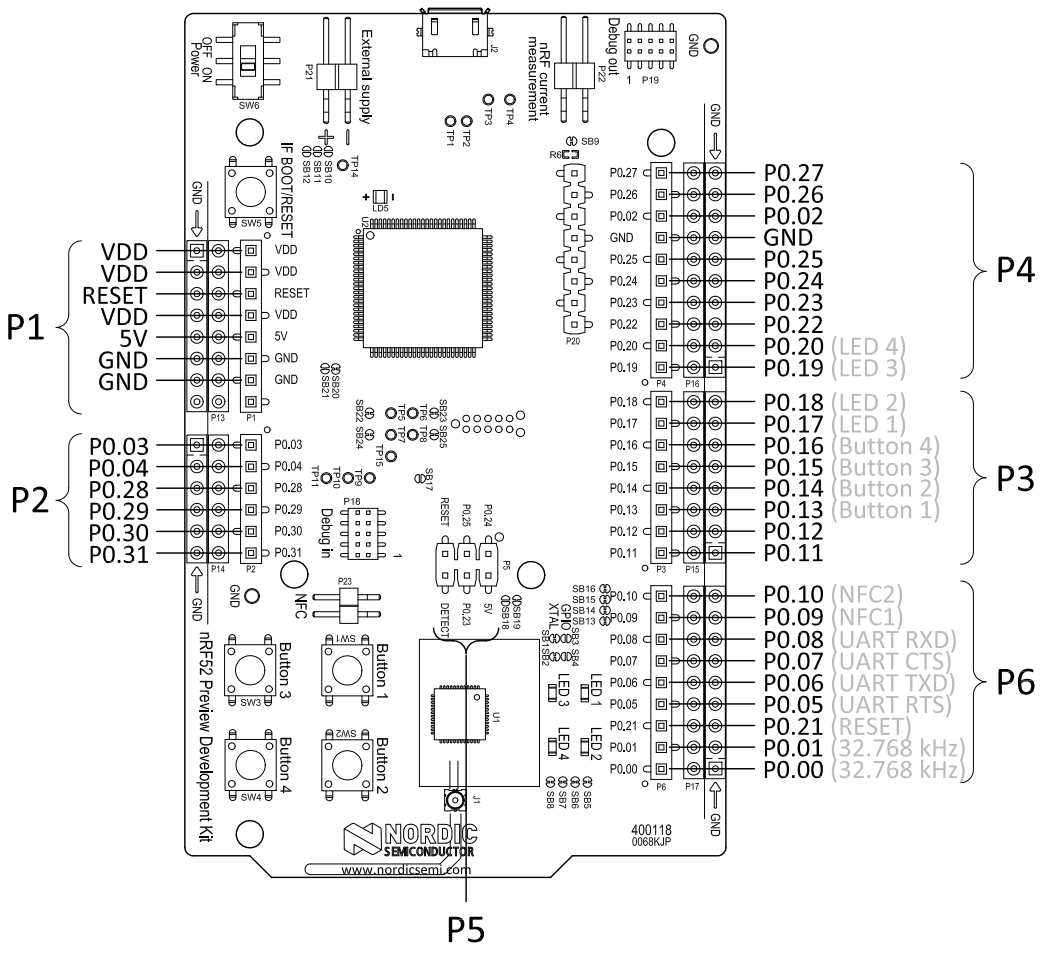

Figure 9: nRF52 PDK connectors

The signals are also available on connectors **P7**, **P8**, **P9**, **P10**, **P11**, and **P12**, which are on the bottom side of the DK. By mounting pin lists on the connector footprints, the nRF52 PDK can be used as a shield for Arduino motherboards or other boards that follow the Arduino standard.

For easy access to GPIO, power, and ground, the signals can also be found on the through-hole connectors **P13**–**P17**.

Important: Some pins have default settings.

- P0.00 and P0.01 are by default used for the 32 kHz crystal and are not available on the connectors. For more information, see Section 32.768 kHz crystal on page 20.
- P0.05, P0.06, P0.07, and P0.08 are by default used by the UART connected to the Interface MCU. For more information, see Section Virtual COM port on page 9.
- P0.09 and P0.10 are by default used by NFC1 and NFC2. For more information, see Section NFC antenna interface on page 25.
- P0.13–P0.20 are by default connected to the buttons and LEDs. For more information, see Section Buttons and LEDs on page 17.

When the nRF52 PDK is used as a shield together with an Arduino standard motherboard, the Arduino signals are routed as shown in Figure 10: Arduino signals routing on the nRF52 PDK on page 17.

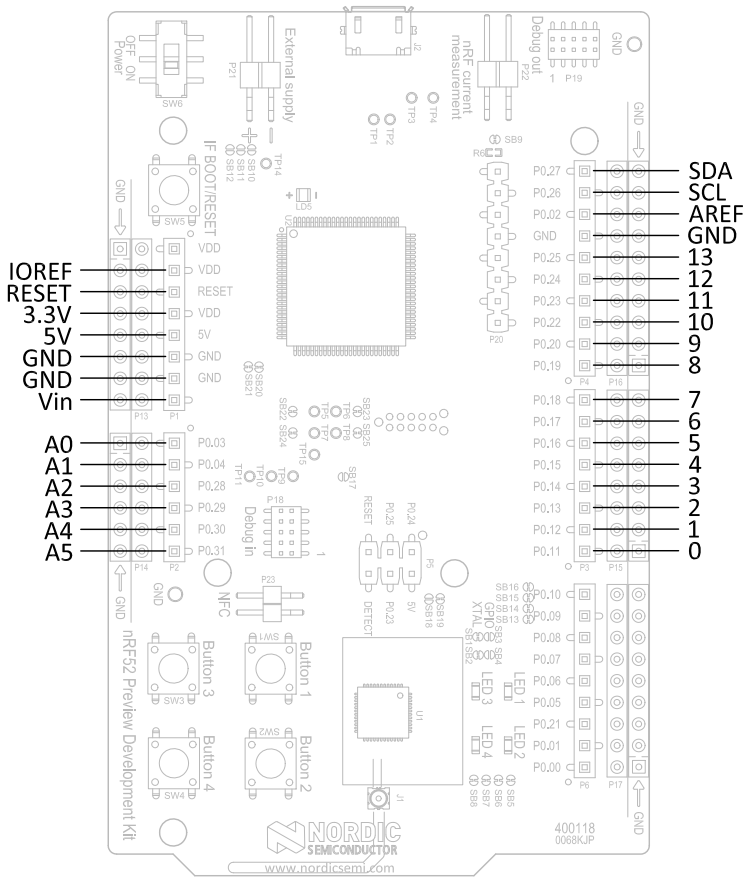

Figure 10: Arduino signals routing on the nRF52 PDK

6.5 Buttons and LEDs

The four buttons and four LEDs on the nRF52 PDK are connected to dedicated I/Os on the nRF52832 chip.

Part	GPIO	Short
Button 1	P0.13	-
Button 2	P0.14	-
Button 3	P0.15	-
Button 4	P0.16	-
LED 1	P0.17	SB5
LED 2	P0.18	SB6
LED 3	P0.19	SB7
LED 4	P0.20	SB8

Table 3: Button and LED connection

If GPIO P0.17–P0.20 are needed elsewhere, the LEDs can be disconnected by cutting the short on **SB5–SB8**, see Figure 11: Disconnecting the LEDs on page 18. The LEDs and buttons can also be disconnected by using the I/O extender as described in I/O expander for buttons and LEDs on page 18.

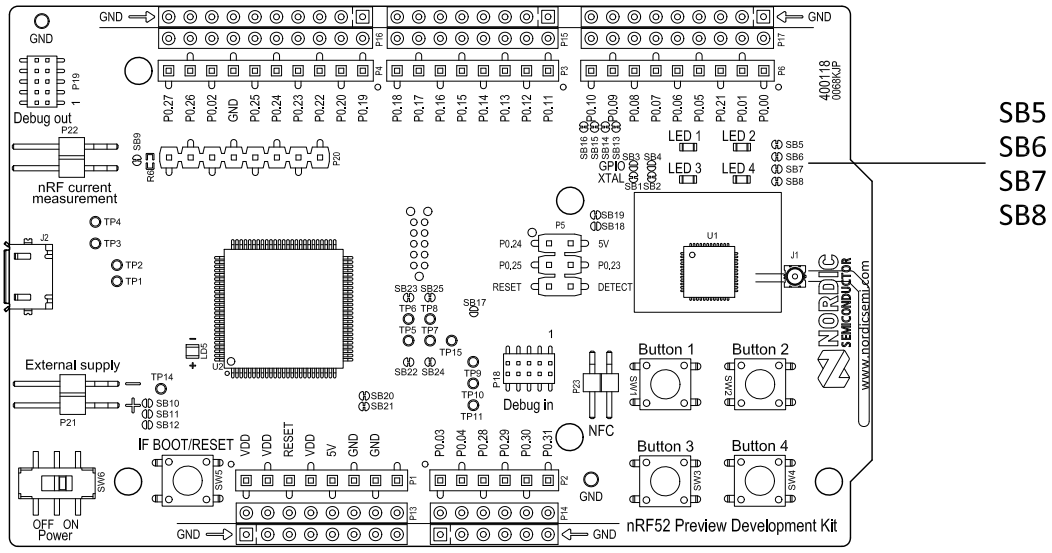

Figure 11: Disconnecting the LEDs

The buttons are active low, meaning the input will be connected to ground when the button is activated. The buttons have no external pull-up resistor, so to use the buttons the P0.13–P0.16 pins must be configured as an input with an internal pull-up resistor.

The LEDs are active low, meaning that writing a logical zero ('0') to the output pin will illuminate the LED.

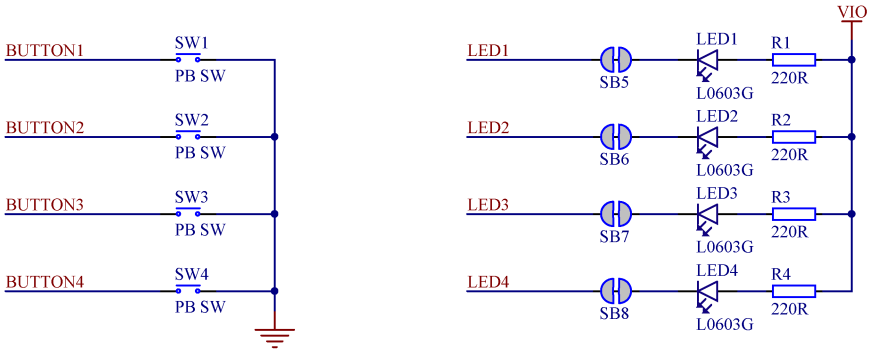

Figure 12: Button and LED configuration

6.5.1 I/O expander for buttons and LEDs

The nRF52 PDK has an I/O expander to avoid conflicts with boards that follow the Arduino standard, the on-board GPIOs for the buttons and LEDs would otherwise possibly conflict with such boards.

GPIO	Part	Arduino signal
P0.13	Button 1	2
P0.14	Button 2	3
P0.15	Button 3	4
P0.16	Button 4	5
P0.17	LED 1	6
P0.18	LED 2	7
P0.19	LED 3	8
P0.20	LED 4	9

Table 4: GPIO connection

The I/O expander will release these GPIOs for general use when the nRF52 PDK is used together with boards that follows the Arduino standard. The I/O expander can be permanently enabled by shorting solder bridge **SB18** or permanently disabled by cutting the shorting track on **SB19**. You must also short **SB18** when cutting **SB19** for full compatibility with the Arduino standard.

The I/O extender can be temporarily enabled by connecting SHIELD DETECT to ground.

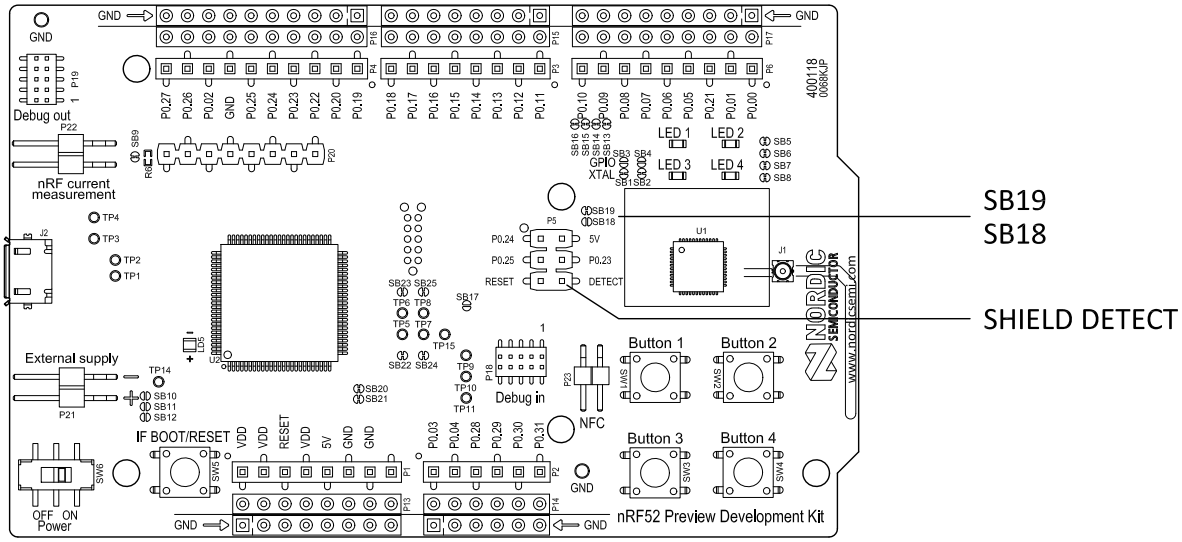

Figure 13: Enable or disable I/Os for Arduino standard

In addition to the buttons and LEDs, the following GPIOs are used for the I/O expander:

I/O expander signal	GPIO
/INT	P0.17
SDA	P0.26
SCL	P0.27

Table 5: I/O expander connection

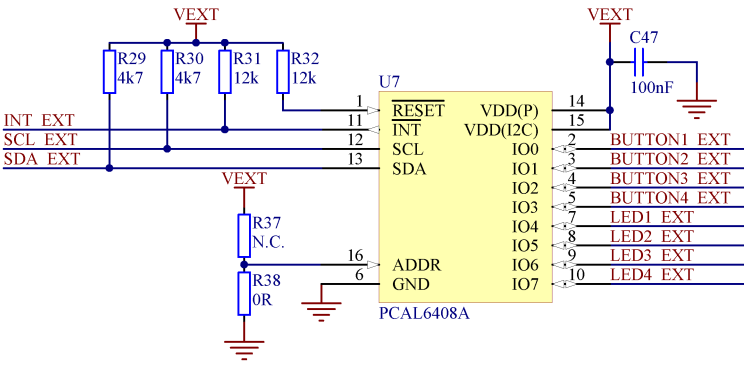

Figure 14: I/O expander schematic

Important: SW debouncing should not be needed when using the I/O expander. Each button on the nRF52 PDK is equipped with a debouncing filter.

6.6 32.768 kHz crystal

nRF52832 can use an optional 32.768 kHz crystal (X2) for higher accuracy and lower average power consumption.

On the nRF52 PDK, P0.00 and P0.01 are by default used for the 32.768 kHz crystal and are not available as a GPIO on the connectors.

Important: When using ANT/ANT+, the 32.768 kHz crystal (X2) is required for correct operation.

If P0.00 and P0.01 are needed as normal I/Os, the 32.768 kHz crystal can be disconnected and the GPIO routed to the connectors. Cut the shorting track on **SB1** and **SB2**, and solder **SB3** and **SB4**. See Figure 15: Configuring P0.00 and P0.01 on page 20 for reference.

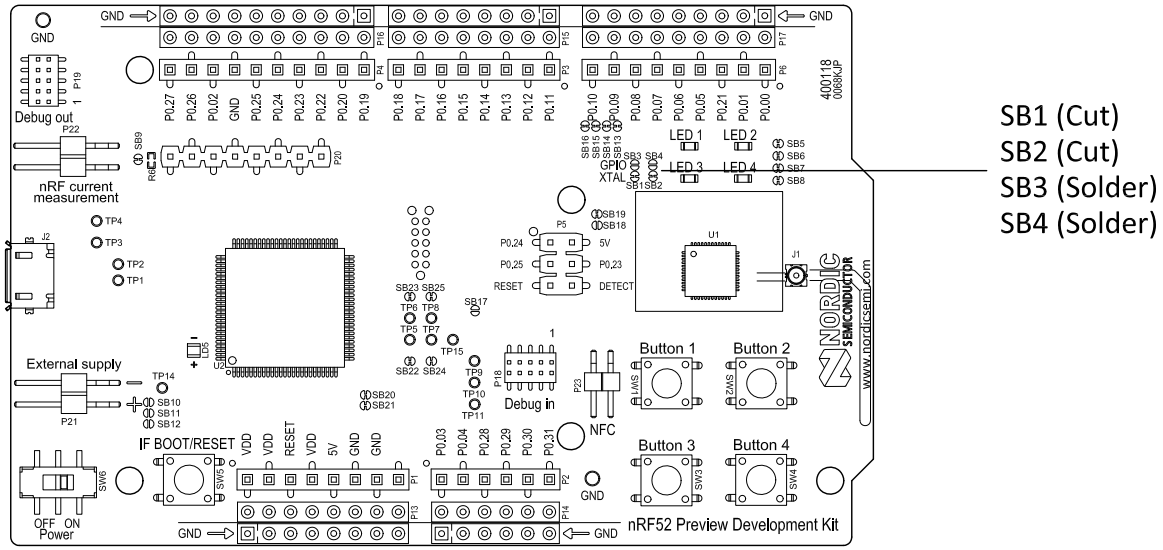

Figure 15: Configuring P0.00 and P0.01

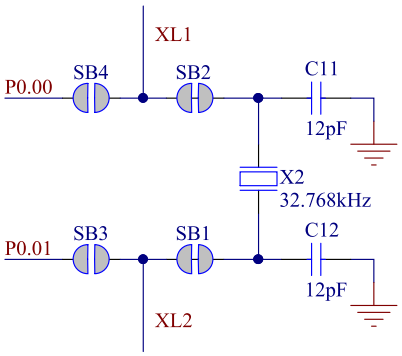

Figure 16: 32.768 kHz crystal and SB1 to SB4 schematic

6.7 Measuring current

The current drawn by the nRF52832 device can be monitored on the nRF52 PDK.

To measure the current, you must first prepare the development kit by cutting the shorting of solder bridge **SB9**. There are two ways of measuring the current consumption: using an ampere-meter or an oscilloscope.

1. Ampere-meter:
   a. Connect an ampere-meter between the pins of connector **P22**. This will monitor the current directly.

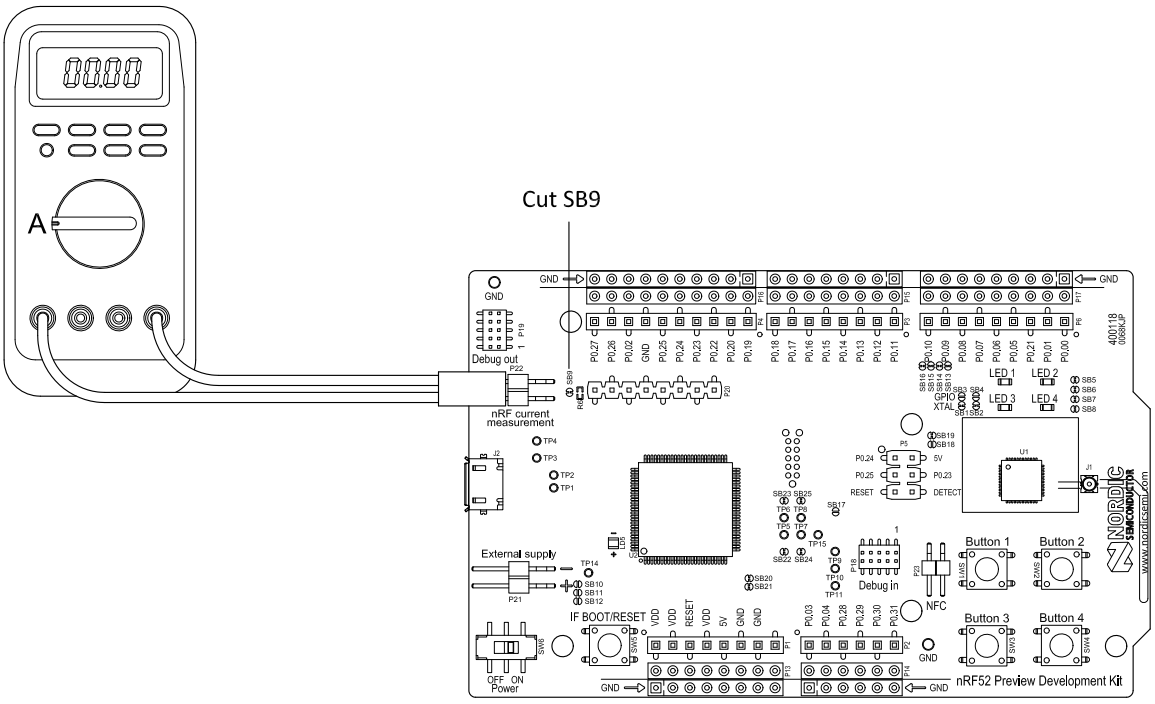

Figure 17: Current measurement with ampere-meter

2. Oscilloscope:
   a. Mount a resistor on the footprint for **R6**. The resistor should not be larger than 10 Ω.
   b. Connect an oscilloscope in differential mode or similar with two probes on the pins of the **P22** connector.
   c. Measure the voltage drop. The voltage drop will be proportional to the current consumption. For example, if a 10 Ω resistor is chosen, 10 mV equals 1 mA.

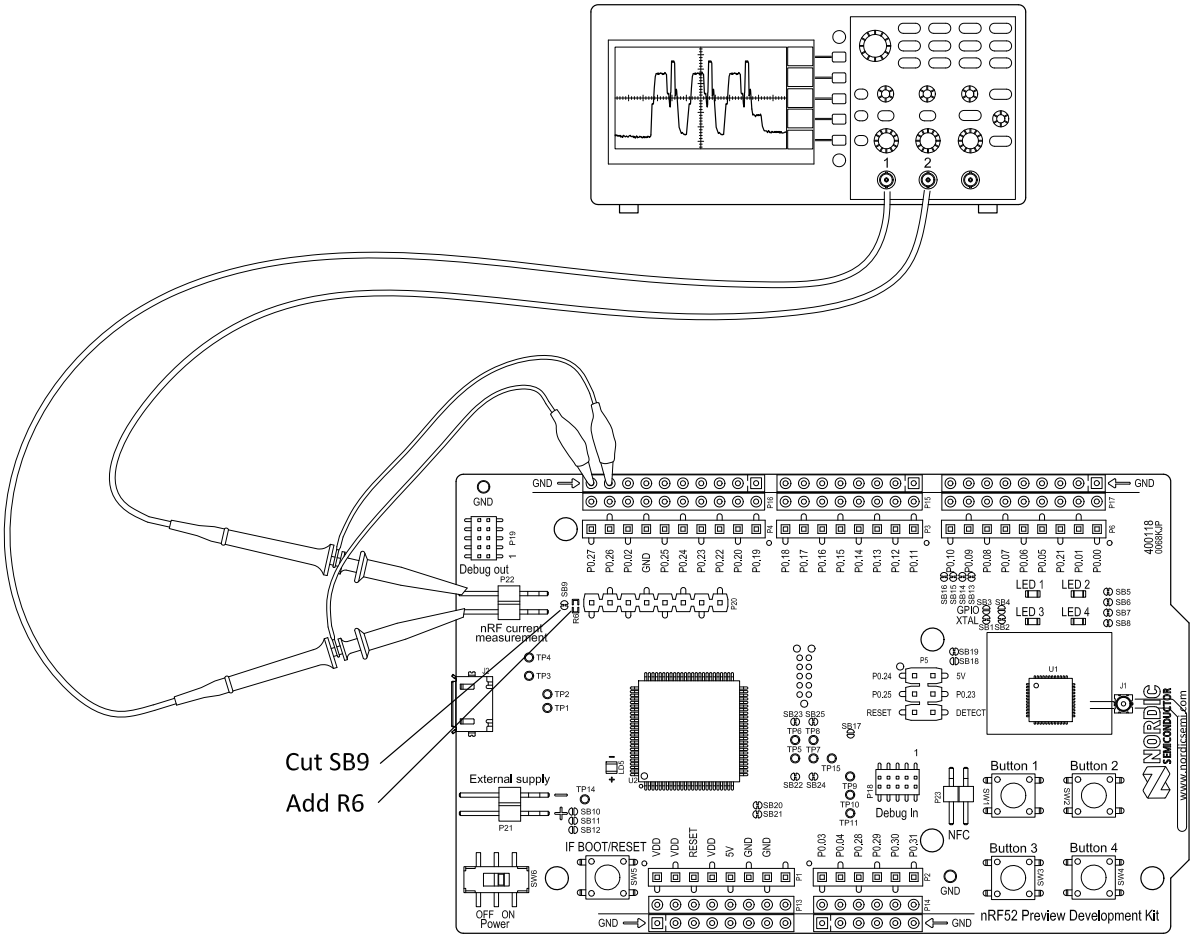

Figure 18: Current measurement with oscilloscope

Important: The current measurements will become unreliable when a serial terminal is connected to the Virtual COM port.

6.8 RF measurements

The nRF52 PDK is equipped with a small size coaxial connector (**J1**) for conducted measurements of the RF signal.

The connector is of SWF type from Murata (part no. MM8130-2600) with an internal switch. By default, when there is no cable attached, the RF signal is routed to the on-board PCB trace antenna.

A test probe is available from Murata (part no. MXHS83QE3000) with a standard SMA connection on the other end for connecting instruments. When connecting the test probe, the internal switch in the SWF connector will disconnect the PCB antenna and connect the RF signal from the nRF52832 device to the test probe.

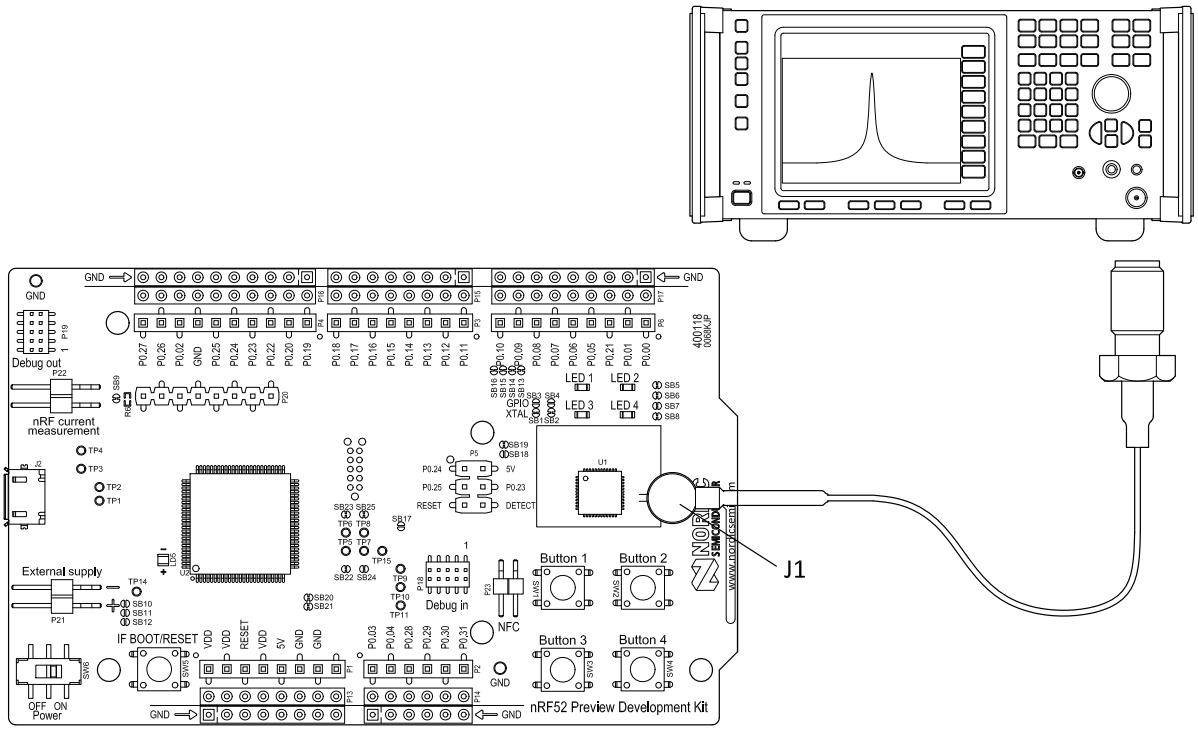

Figure 19: Connecting a spectrum analyzer

The connector and test probe will add loss to the RF signal which should be taken into account when doing measurements, see Table 6: Typical loss in connector and test probe on page 23.

Frequency (MHz)	Loss (dB)
2440	1.0
4880	1.7
7320	2.6

Table 6: Typical loss in connector and test probe

6.9 Debug input

The Debug in connector (**P18**) makes it possible to connect external debuggers for debugging while running on battery or external power supply.

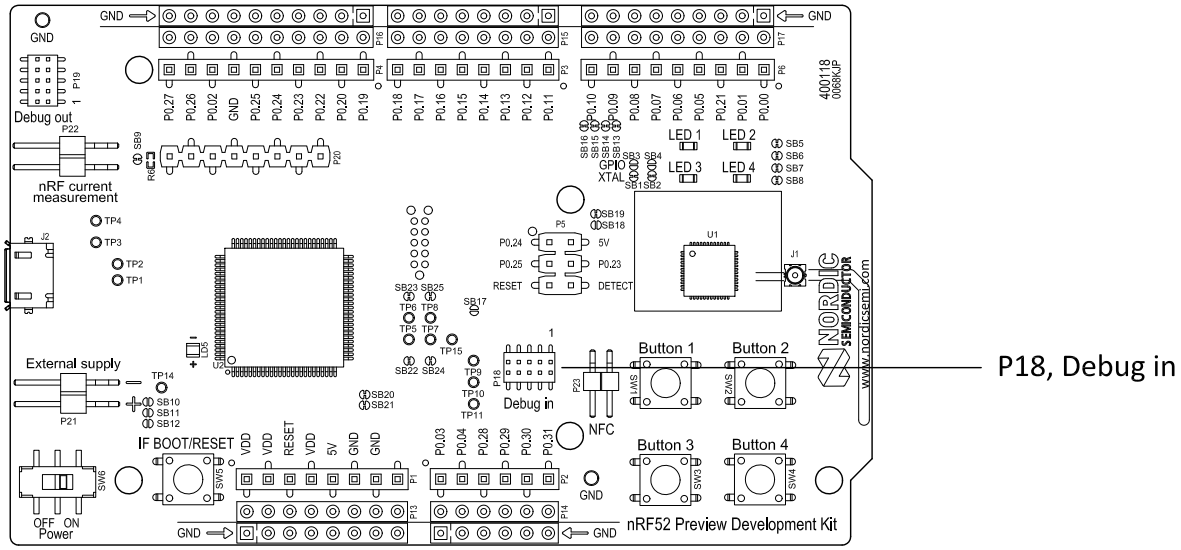

Figure 20: Debug input connector

6.10 Debug output

The nRF52 PDK supports programming and debugging external boards. To debug an external board, connect to the Debug out connector (**P19**) with a 10 pin cable.

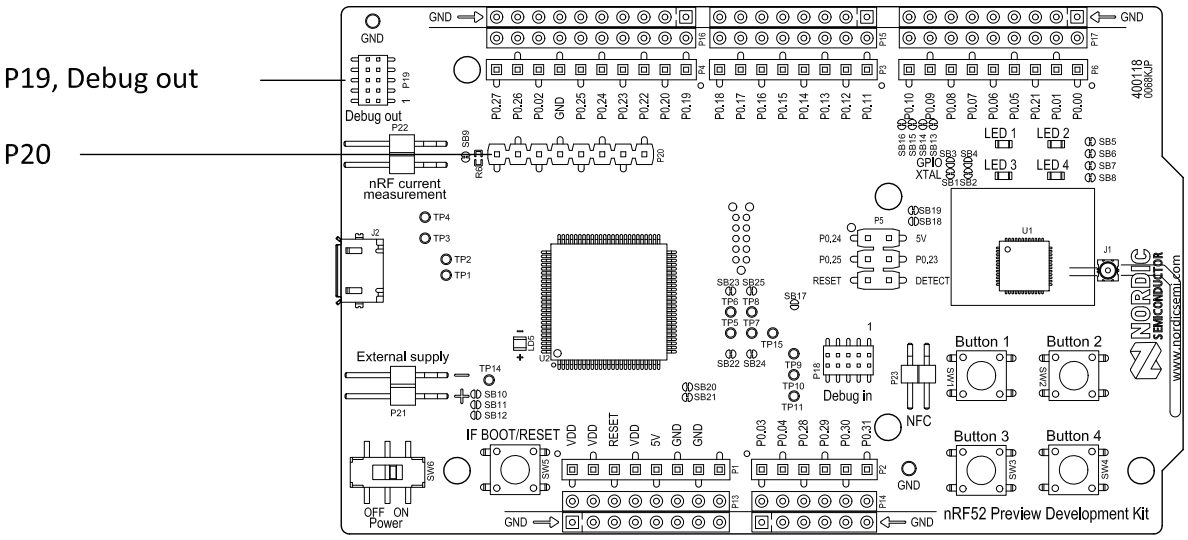

Figure 21: Debug output connector

When the external board is powered, the interface MCU will detect the supply voltage of the board and program/debug the target chip on the external board instead of the on-board nRF52832.

Important: The voltage supported by external debugging/programming is 3.0 V.

You can also use **P20** as a debug out connection to program shield mounted targets. For the Debug out header (**P19**), the Interface MCU will detect the supply voltage on the mounted shield and program/debug the shield target.

If the Interface MCU detects target power on both **P19** and **P20**, it will by default program/debug the target connected to **P19**.

6.11 NFC antenna interface

The nRF52 PDK supports a Near Field Communication (NFC) tag.

NFC-A listen mode operation is supported on nRF52832. The NFC antenna input is available on connector **P23** on the nRF52 PDK.

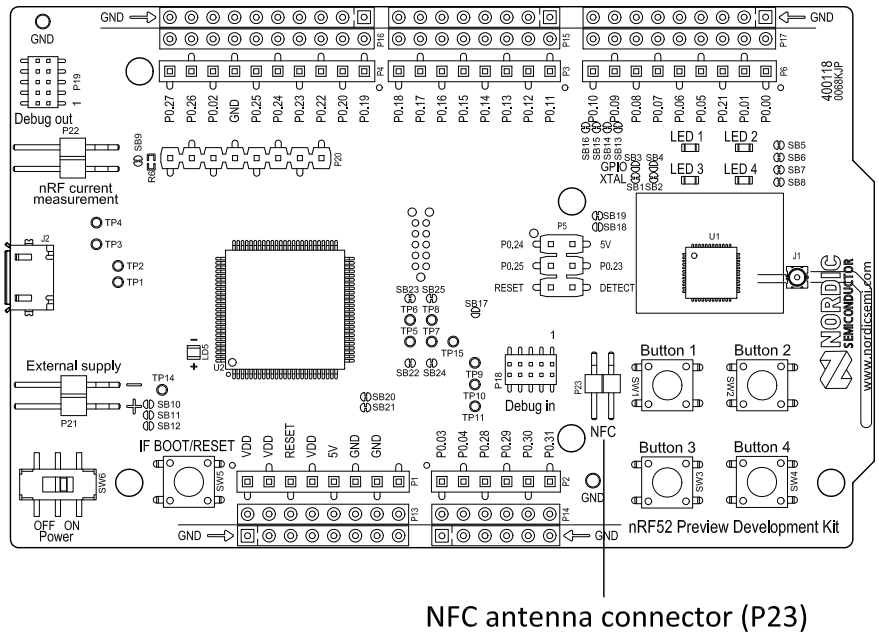

Figure 22: NFC antenna connector

NFC uses two pins, pin 11 (**NFC1**) and pin 12 (**NFC2**) to connect the antenna. These pins are shared with GPIOs (**P0.09** and **P0.10**) and the PROTECT field in the NFCPINS register in UICR defines the usage of these pins and their protection level against abnormal voltages. The content of the NFCPINS register is reloaded at every reset.

Important: The NFC pins are enabled by default. NFC can be disabled and GPIOs enabled by defining the CONFIG_NFCT_PINS_AS_GPIOS variable in the project settings. This can be done by defining the preprocessor symbol in Keil, go to: **Project > Options for Target > C/C++ > Preprocessor Symbols > Define**. Here you can add the CONFIG_NFCT_PINS_AS_GPIOS variable after NRF52.

This functionality can be removed by doing a nRFjprog --recover.

Pin 11 and pin 12 are by default configured to use the NFC antenna, but if pin 11 and pin 12 are needed as normal GPIOs, **R25** and **R26** must be relocated to **R27** and **R28**.

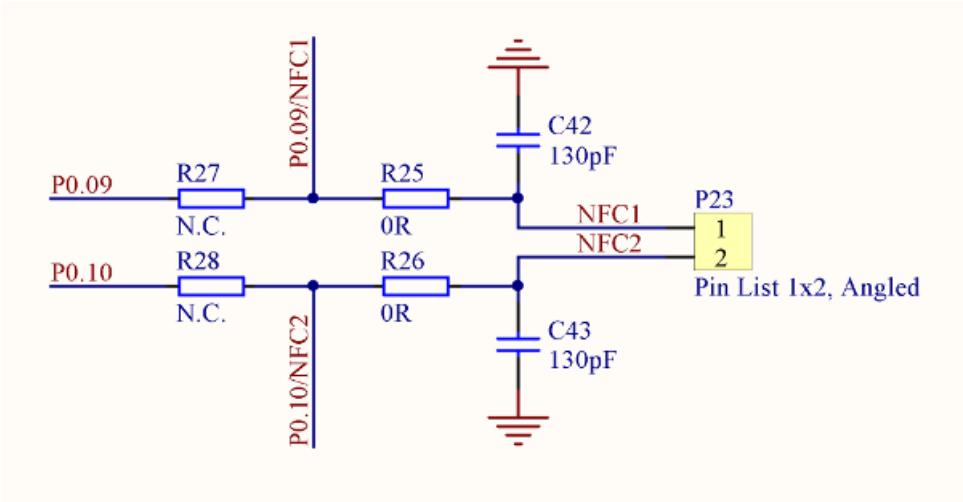

Figure 23: NFC input schematic

Legal notices

By using this documentation you agree to our terms and conditions of use. Nordic Semiconductor may change these terms and conditions at any time without notice.

Liability disclaimer

Nordic Semiconductor ASA reserves the right to make changes without further notice to the product to improve reliability, function, or design. Nordic Semiconductor ASA does not assume any liability arising out of the application or use of any product or circuits described herein.

Nordic Semiconductor ASA does not give any representations or warranties, expressed or implied, as to the accuracy or completeness of such information and shall have no liability for the consequences of use of such information. If there are any discrepancies, ambiguities or conflicts in Nordic Semiconductor's documentation, the Product Specification prevails.

Nordic Semiconductor ASA reserves the right to make corrections, enhancements, and other changes to this document without notice.

Life support applications

Nordic Semiconductor products are not designed for use in life support appliances, devices, or systems where malfunction of these products can reasonably be expected to result in personal injury.

Nordic Semiconductor ASA customers using or selling these products for use in such applications do so at their own risk and agree to fully indemnify Nordic Semiconductor ASA for any damages resulting from such improper use or sale.

RoHS and REACH statement

Complete hazardous substance reports, material composition reports and latest version of Nordic's REACH statement can be found on our website www.nordicsemi.com.

Trademarks

All trademarks, service marks, trade names, product names, and logos appearing in this documentation are the property of their respective owners.

Copyright notice

© 2020 Nordic Semiconductor ASA. All rights are reserved. Reproduction in whole or in part is prohibited without the prior written permission of the copyright holder.

COMPANY WITH
QUALITY SYSTEM
CERTIFIED BY DNV GL
= ISO 9001 =